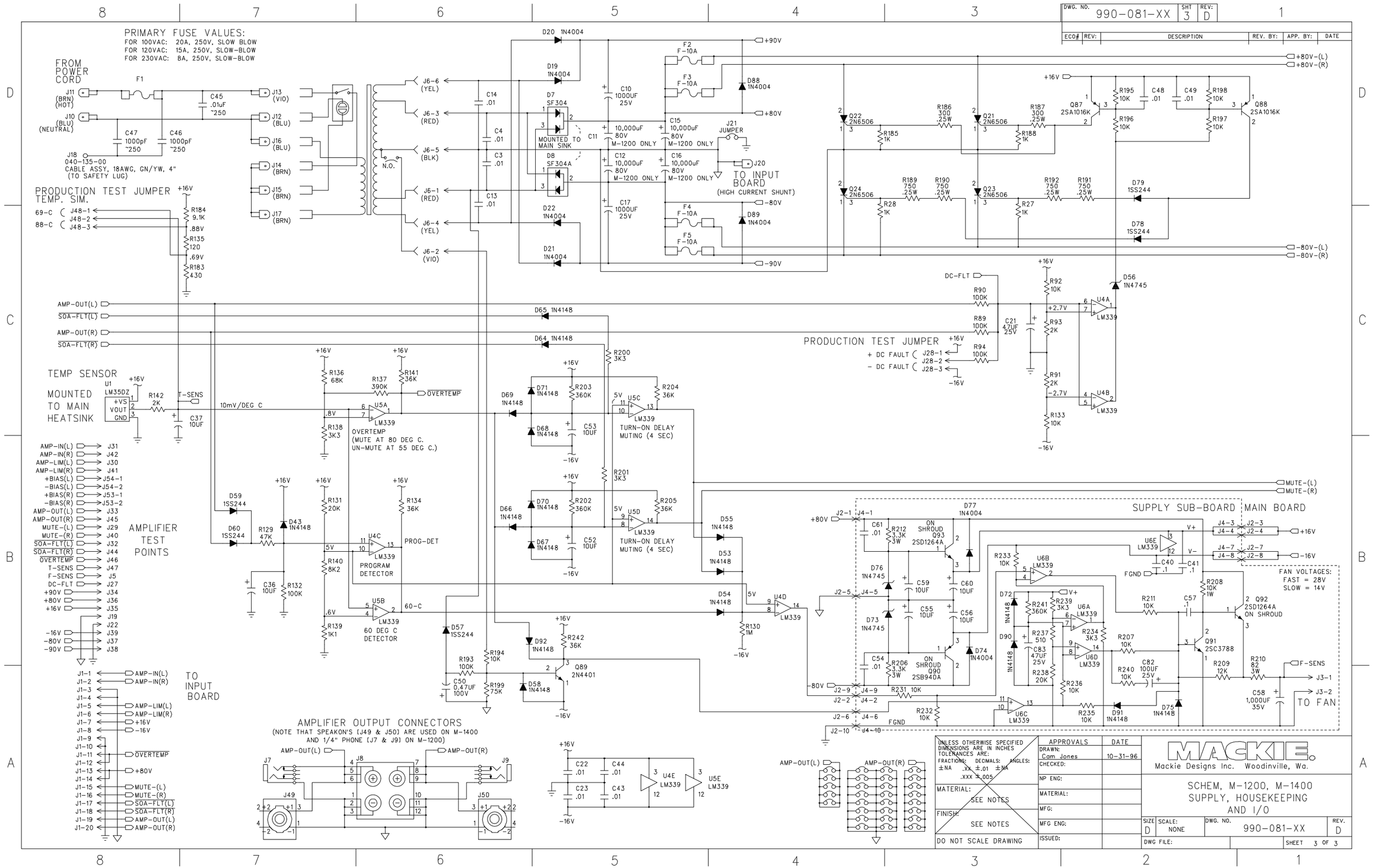
DWG. NO. 990-081-XX SHT 3 REV: D
ECO# REV: DESCRIPTION REV. BY: APP. BY: DATE
PRIMARY FUSE VALUES:
FOR 100VAC: 20A, 250V, SLOW BLOW
FOR 120VAC: 15A, 250V, SLOW-BLOW
FOR 230VAC: 8A, 250V, SLOW-BLOW
FROM POWER CORD
J11 (BRN) (HOT)
J10 (BLU) (NEUTRAL)
J18 040-135-00 CABLE ASSY, 18AWG, GN/YW, 4" (TO SAFETY LUG)
PRODUCTION TEST JUMPER TEMP. SIM.
69-C J48-1
88-C J48-2
J48-3
TEMP SENSOR MOUNTED TO MAIN HEATSINK
U1 LM35DZ
10mV/DEG C
OVERTEMP (MUTE AT 80 DEG C. UN-MUTE AT 55 DEG C.)
TURN-ON DELAY MUTING (4 SEC)
PROGRAM DETECTOR
60 DEG C DETECTOR
AMPLIFIER TEST POINTS
TO INPUT BOARD
AMPLIFIER OUTPUT CONNECTORS
(NOTE THAT SPEAKON'S [J49 & J50] ARE USED ON M-1400 AND 1/4" PHONE [J7 & J9] ON M-1200)
TO INPUT BOARD (HIGH CURRENT SHUNT)
PRODUCTION TEST JUMPER
+ DC FAULT J28-1
J28-2
- DC FAULT J28-3
SUPPLY SUB-BOARD
MAIN BOARD
FAN VOLTAGES: FAST = 28V SLOW = 14V
TO FAN
UNLESS OTHERWISE SPECIFIED DIMENSIONS ARE IN INCHES TOLERANCES ARE:
FRACTIONS: ±NA DECIMALS: .XX ±.01 .XXX ±.005 ANGLES: ±NA
MATERIAL: SEE NOTES
FINISH: SEE NOTES
DO NOT SCALE DRAWING
APPROVALS DATE
DRAWN: Cam Jones 10-31-96
CHECKED:
NP ENG:
MATERIAL:
MFG:
MFG ENG:
ISSUED:
MACKIE
Mackie Designs Inc. Woodinville, Wa.
SCHEM, M-1200, M-1400 SUPPLY, HOUSEKEEPING AND I/O
SIZE D SCALE: NONE DWG. NO. 990-081-XX REV. D
DWG FILE:
SHEET 3 OF 3