AMP

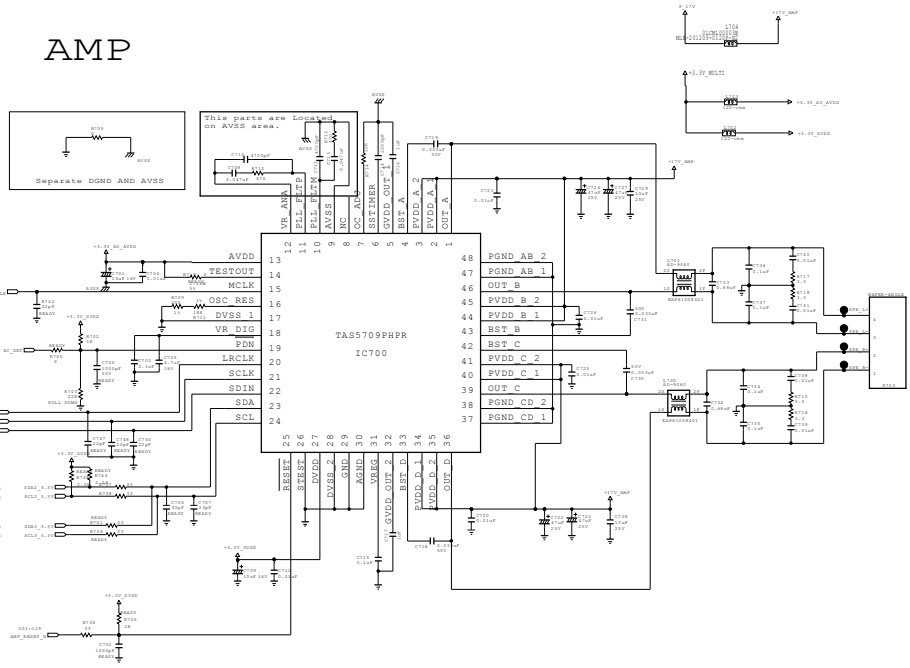

TV_L/ROUT
MNT/DTV OUT
MUTE Ctrl

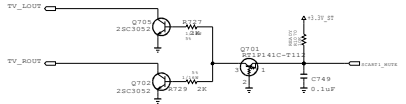
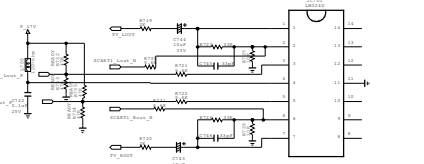
Audio Out Amp