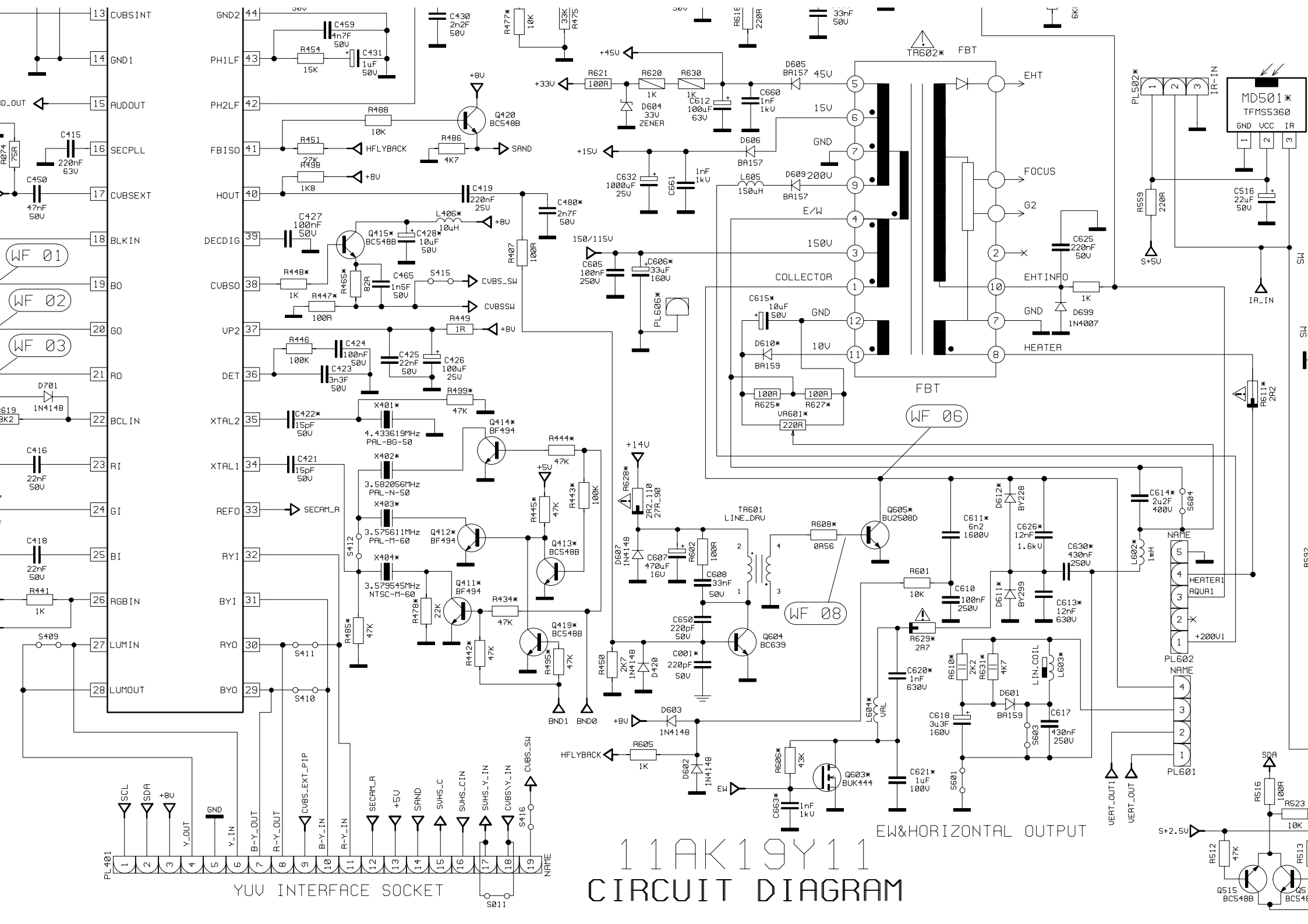
11AK19Y11
CIRCUIT DIAGRAM
YUV INTERFACE SOCKET
EW&HORIZONTAL OUTPUT
FBT
TR602*
MD501*
TFMS5360
GND VCC IR
PL502*
IR-IN
EHT
FOCUS
G2
EHTINFO
GND
HEATER
E/W
150V
COLLECTOR
10V
15V
45V
200V
150/115V
CVBSINT
GND1
AUDOUT
SECPLL
CVBSEXT
BLKIN
BO
GO
RO
BCLIN
RI
GI
BI
RGBIN
LUMIN
LUMOUT
GND2
PH1LF
PH2LF
FBISO
HOUT
DECDIG
CVBSO
VP2
DET
XTAL2
XTAL1
REFO
RYI
BYI
RYO
BYO
HFLYBACK
SAND
CVBS_SW
CVBSSW
SECAM_R
WF 01
WF 02
WF 03
WF 06
WF 08
TR601
LINE_DRV
PL601
PL602
HEATER1
AQUA1
+200V1
VERT_OUT1
VERT_OUT
S+5V
S+2.5V
IR_IN
SCL
SDA
+8V
GND
Y_OUT
Y_IN
B-Y_OUT
R-Y_OUT
CVBS_EXT_PIP
B-Y_IN
R-Y_IN
SECAM_R
+5V
SAND
SVHS_C
SVHS_CIN
SVHS_Y_IN
CVBSY_IN
CVBS_SW
PL401
NAME