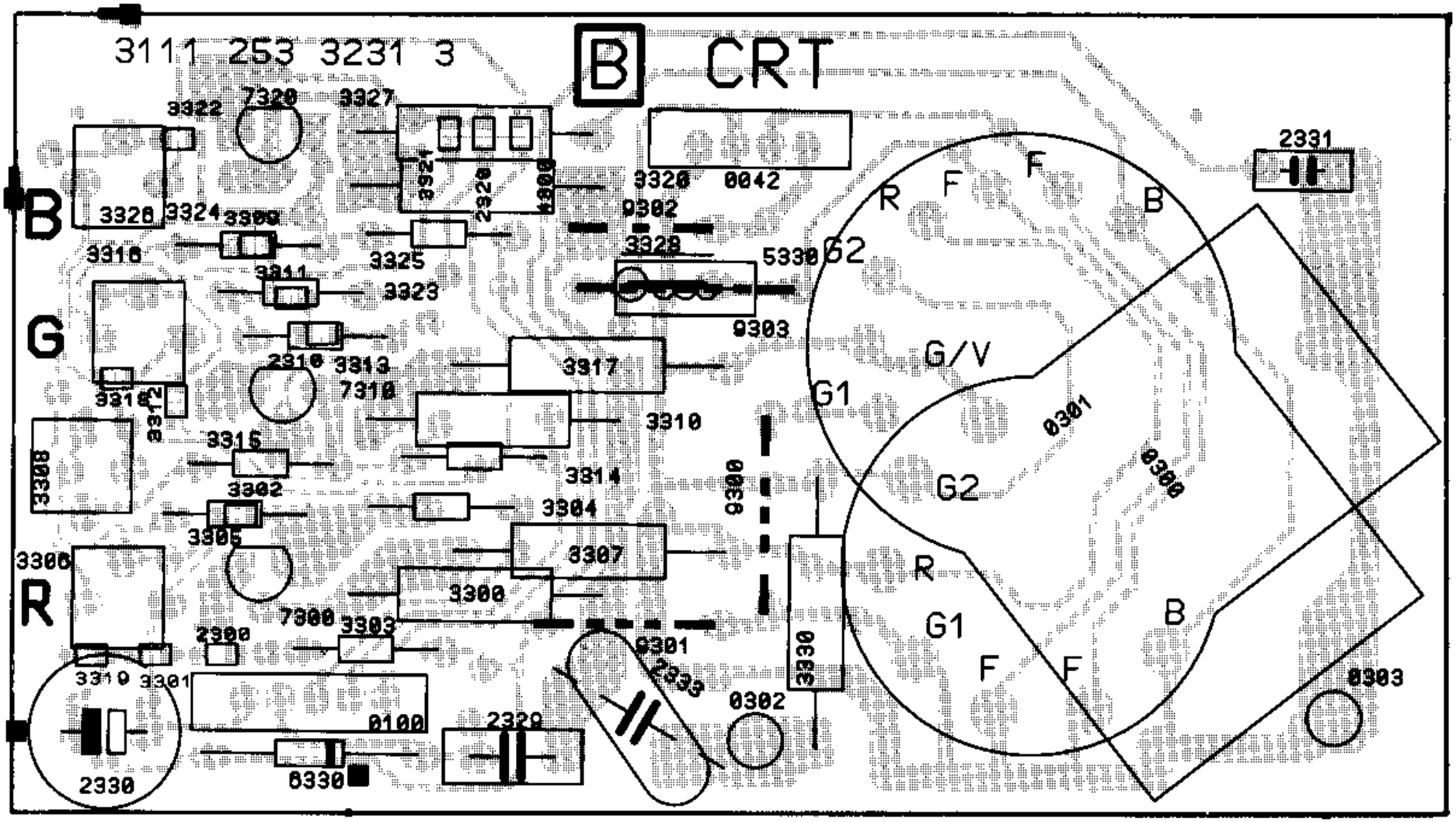PCB - CRT PANEL