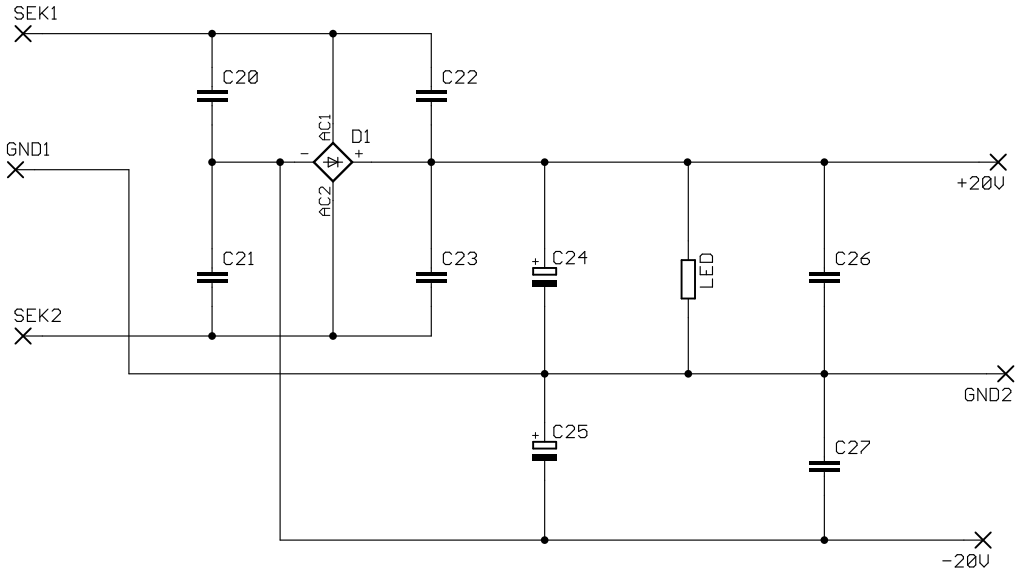

TITLE: zdroj	
Document Number:	REV:
Date: 22.12.2006 23:44:56	Sheet: 1/1