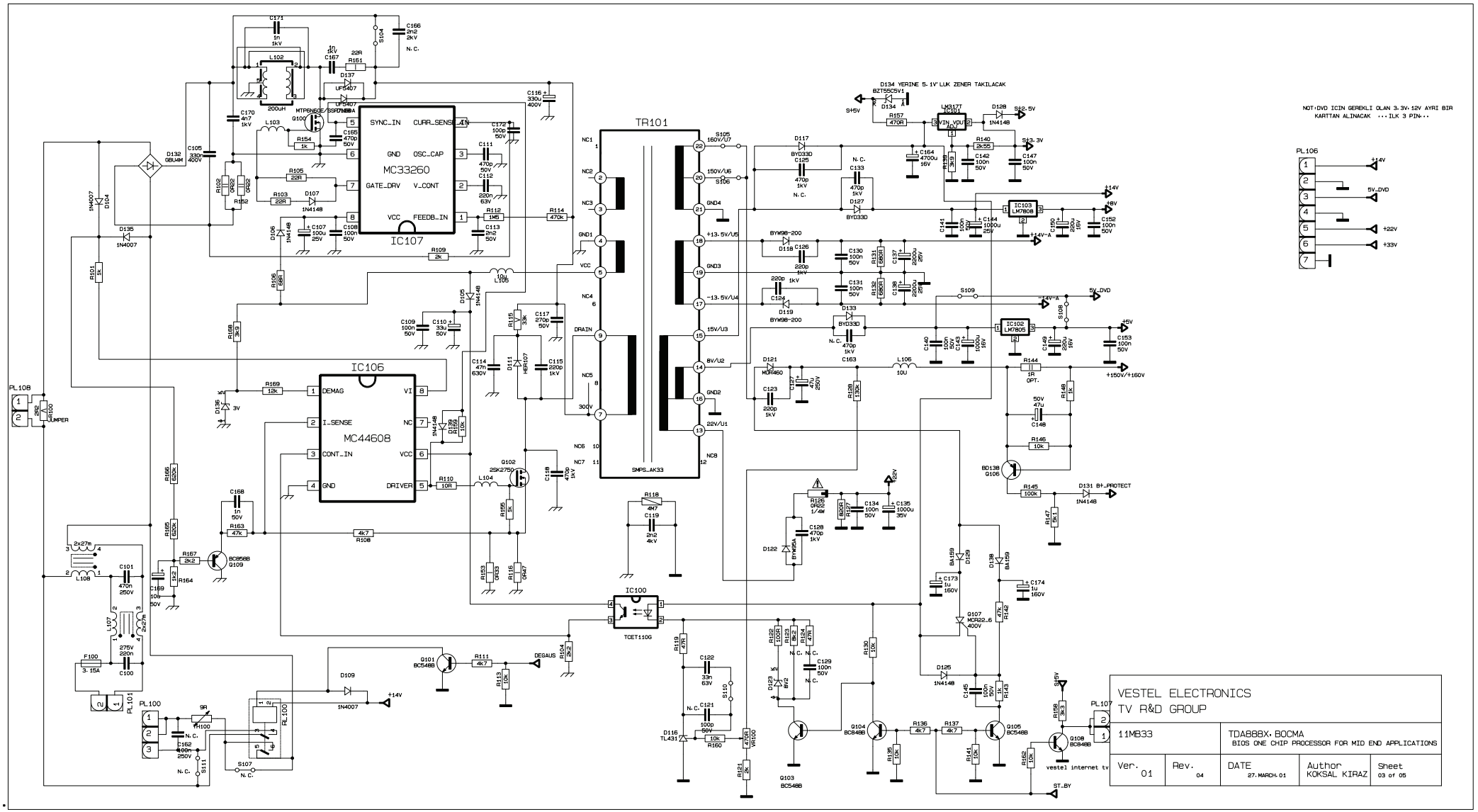
IC107
MC33260
SYNC_IN
CURR_SENS
GND
OSC_CAP
GATE_DRV
V_CONT
VCC
FEEDB_IN
IC106
MC44608
DEMAG
I_SENSE
CONT_IN
GND
VI
NC
VCC
DRIVER
TR101
SMPS_AK33
IC100
TCET110G
IC103
LM7808
IC102
LM7805
PL106
PL108
PL100
PL101
PL107
D134 YERINE 5.1V LUK ZENER TAKILACAK
NOT:DVD ICIN GEREKLI OLAN 3.3V, 12V AYRI BIR KARTTAN ALINACAK ...ILK 3 PIN..
VESTEL ELECTRONICS
TV R&D GROUP
11MB33
TDA888X, BOCMA
BIOS ONE CHIP PROCESSOR FOR MID END APPLICATIONS
Ver. 01
Rev. 04
DATE 27.MARCH.01
Author KOKSAL KIRAZ
Sheet 03 of 05