CRT Panel

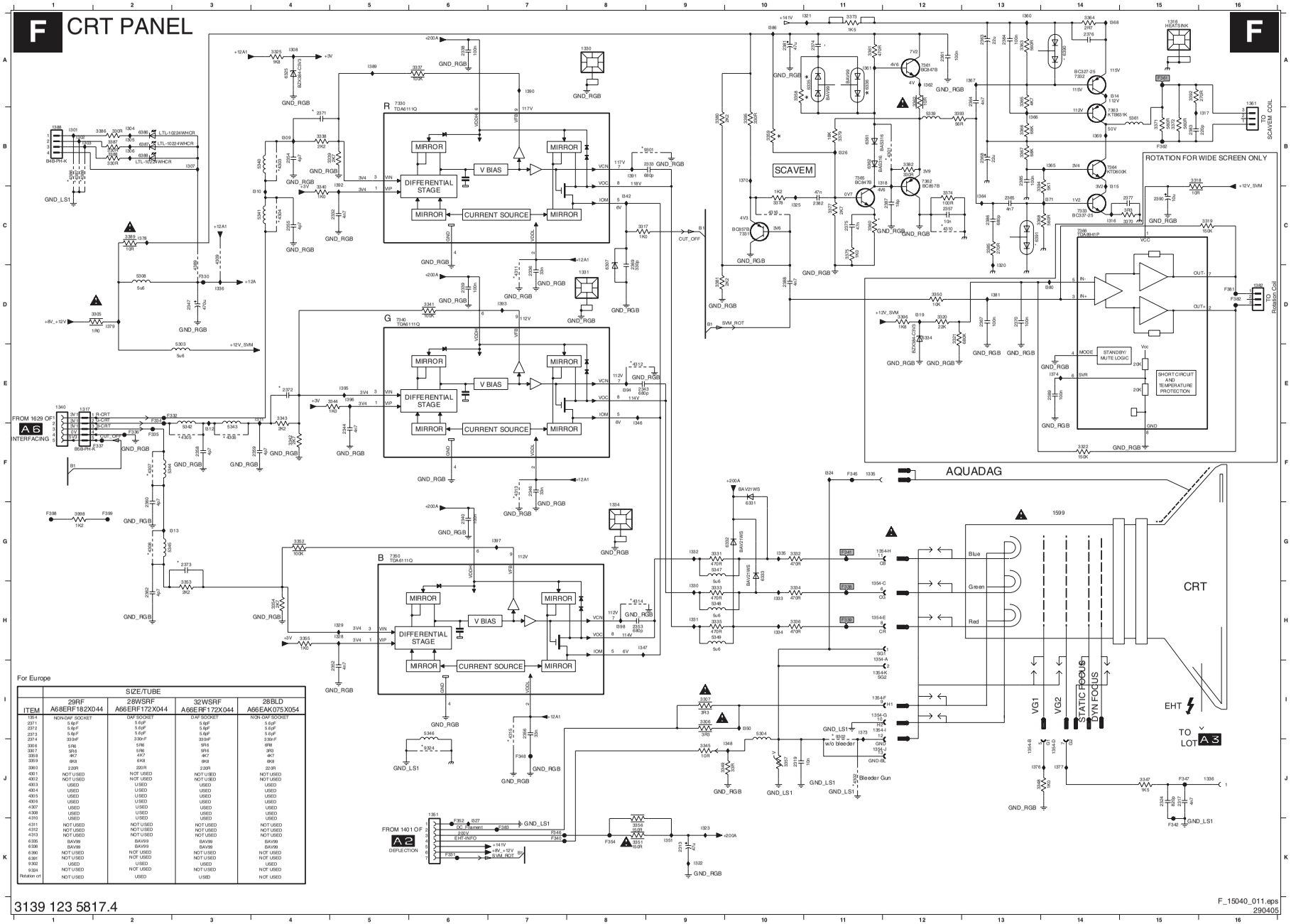

For Europe

ITEM	SIZE/TUBE 29RF A68ERF182X044	28WSRF A66ERF172X044	32WSRF A66ERF172X044	28BLD A66EAK075X054
1354	NON-DAF SOCKET	DAF SOCKET	DAF SOCKET	NON-DAF SOCKET
2371	5.6pF	5.6pF	5.6pF	5.6pF
2372	5.6pF	5.6pF	5.6pF	5.6pF
2373	5.6pF	5.6pF	5.6pF	5.6pF
2374	330nF	330nF	330nF	330nF
3306	5R6	5R6	5R6	6R8
3307	5R6	5R6	5R6	3R3
3358	4K7	4K7	4K7	4K7
3359	6K8	6K8	6K8	6K8
3360	220R	220R	220R	220R
4301	NOT USED	NOT USED	NOT USED	NOT USED
4302	NOT USED	NOT USED	NOT USED	NOT USED
4303	USED	USED	USED	USED
4304	USED	USED	USED	USED
4305	USED	USED	USED	USED
4306	USED	USED	USED	USED
4307	USED	USED	USED	USED
4308	USED	USED	USED	USED
4310	USED	USED	USED	USED
4311	NOT USED	NOT USED	NOT USED	NOT USED
4312	NOT USED	NOT USED	NOT USED	NOT USED
4313	NOT USED	NOT USED	NOT USED	NOT USED
6335	BAV99	BAV99	BAV99	BAV99
6336	BAV99	BAV99	BAV99	BAV99
6390	NOT USED	NOT USED	NOT USED	NOT USED
6391	NOT USED	NOT USED	NOT USED	NOT USED
9302	USED	USED	USED	USED
9324	NOT USED	NOT USED	NOT USED	NOT USED
Rotation crt	NOT USED	USED	USED	NOT USED