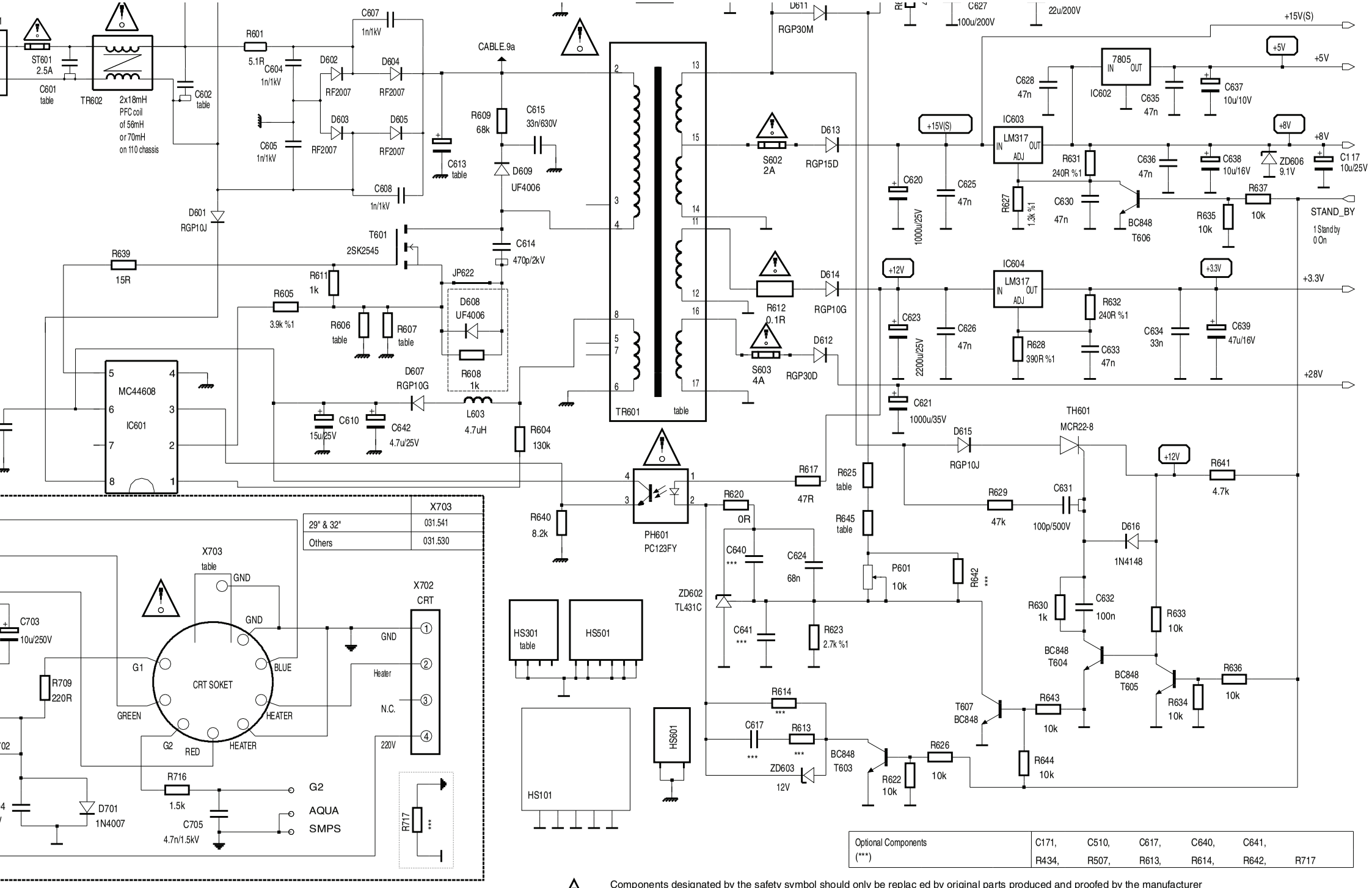

	X703
29" & 32"	031.541
Others	031.530

Optional Components (***)	C171,	C510,	C617,	C640,	C641,	
	R434,	R507,	R613,	R614,	R642,	R717

Components designated by the safety symbol should only be replac ed by original parts produced and proofed by the manufacturer

Sicherheitsbautelle im Sinn der sicherheitsbestimmung. Diese T eile durfen nur durch Originalteile ersetzt werden.

Contrassegno di sicurezza. I componenti devono corrispondere a ricambi originali e devono essere montati a regola d'arte.