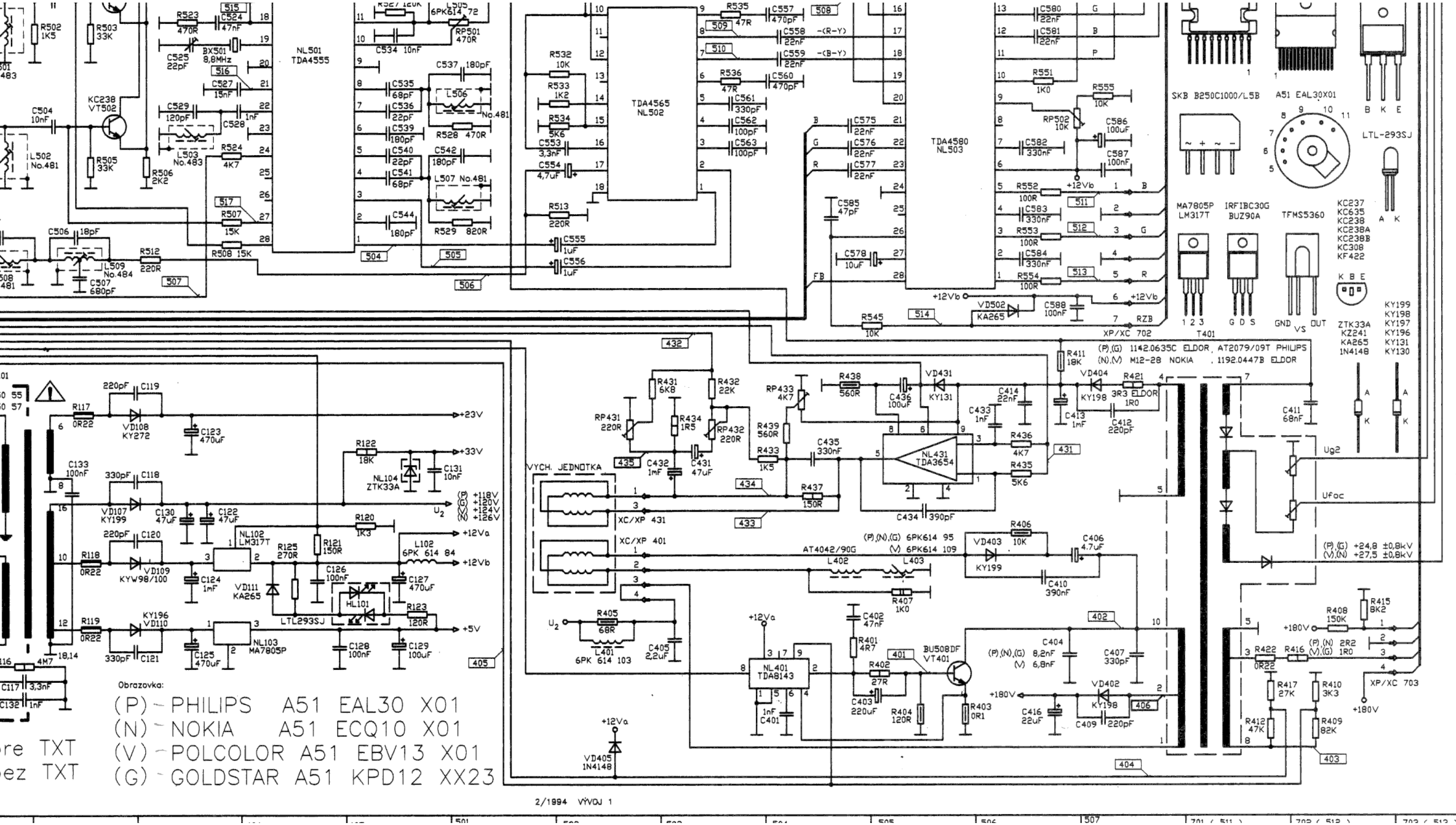
NL501 TDA4555
TDA4565 NL502
TDA4580 NL503
SKB B250C1000/L5B
A51 EAL30X01
LTL-293SJ
MA7805P LM317T
IRFIBC30G BUZ90A
TFMS5360
KC237 KC635 KC238 KC238A KC238B KC308 KF422
ZTK33A KZ241 KA265 1N4148
KY199 KY198 KY197 KY196 KY131 KY130
(P),(G) 1142.0635C ELDOR, AT2079/09T PHILIPS
(N),(V) M12-28 NOKIA , 1192.0447B ELDOR
VYCH. JEDNOTKA
XC/XP 431
XC/XP 401
XP/XC 702
XP/XC 703
NL431 TDA3654
NL401 TDA8143
NL102 LM317T
NL103 MA7805P
LTL293SJ
BU508DF VT401
AT4042/90G
(P),(N),(G) 6PK614 95
(V) 6PK614 109
Obrazovka:
(P) - PHILIPS A51 EAL30 X01
(N) - NOKIA A51 ECQ10 X01
(V) - POLCOLOR A51 EBV13 X01
(G) - GOLDSTAR A51 KPD12 XX23
2/1994 VÝVOJ 1