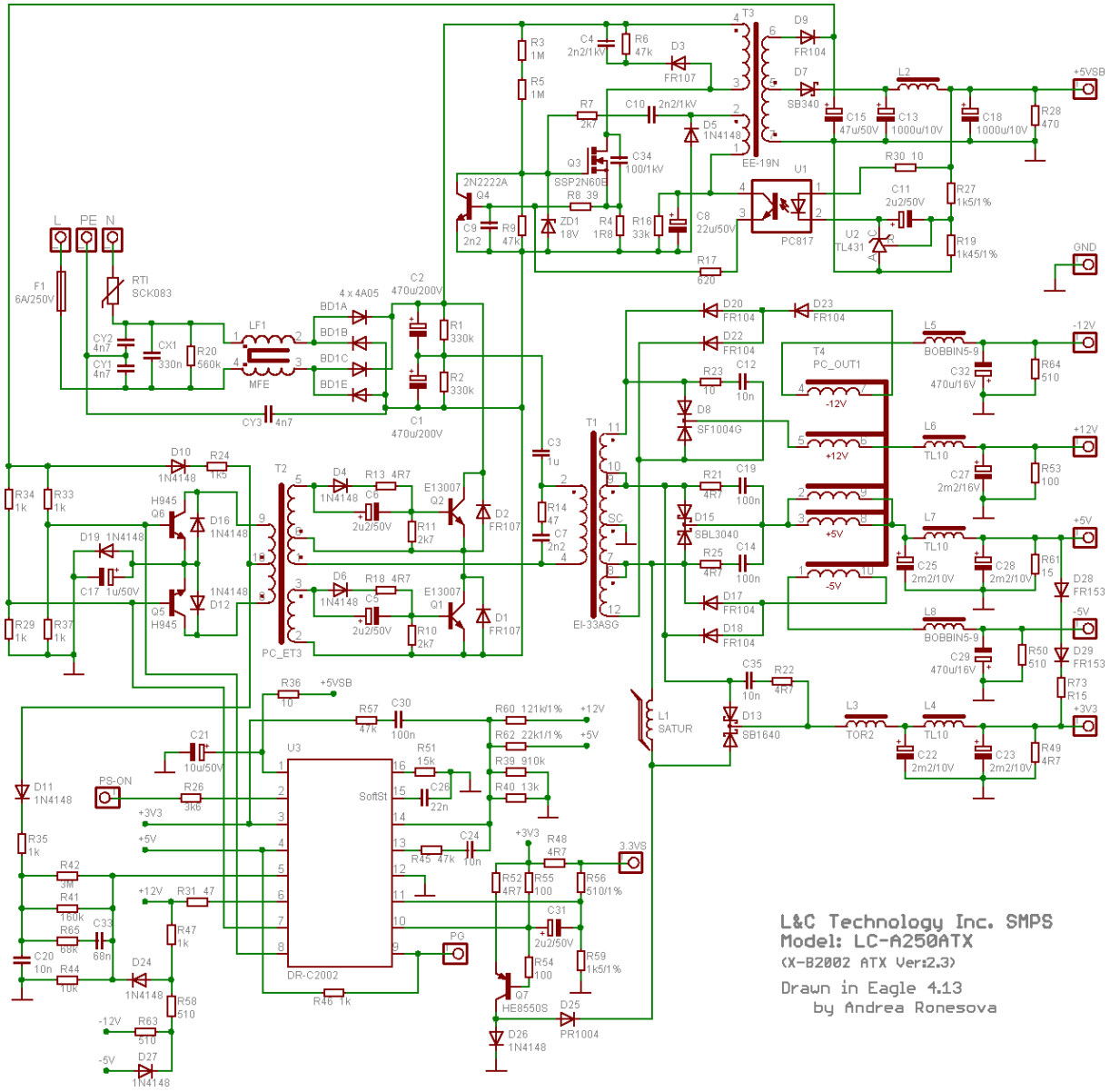
L&C Technology Inc. SMPS
Model: LC-A250ATX
(X-B2002 ATX Ver:2.3)
Drawn in Eagle 4.13
by Andrea Ronesova