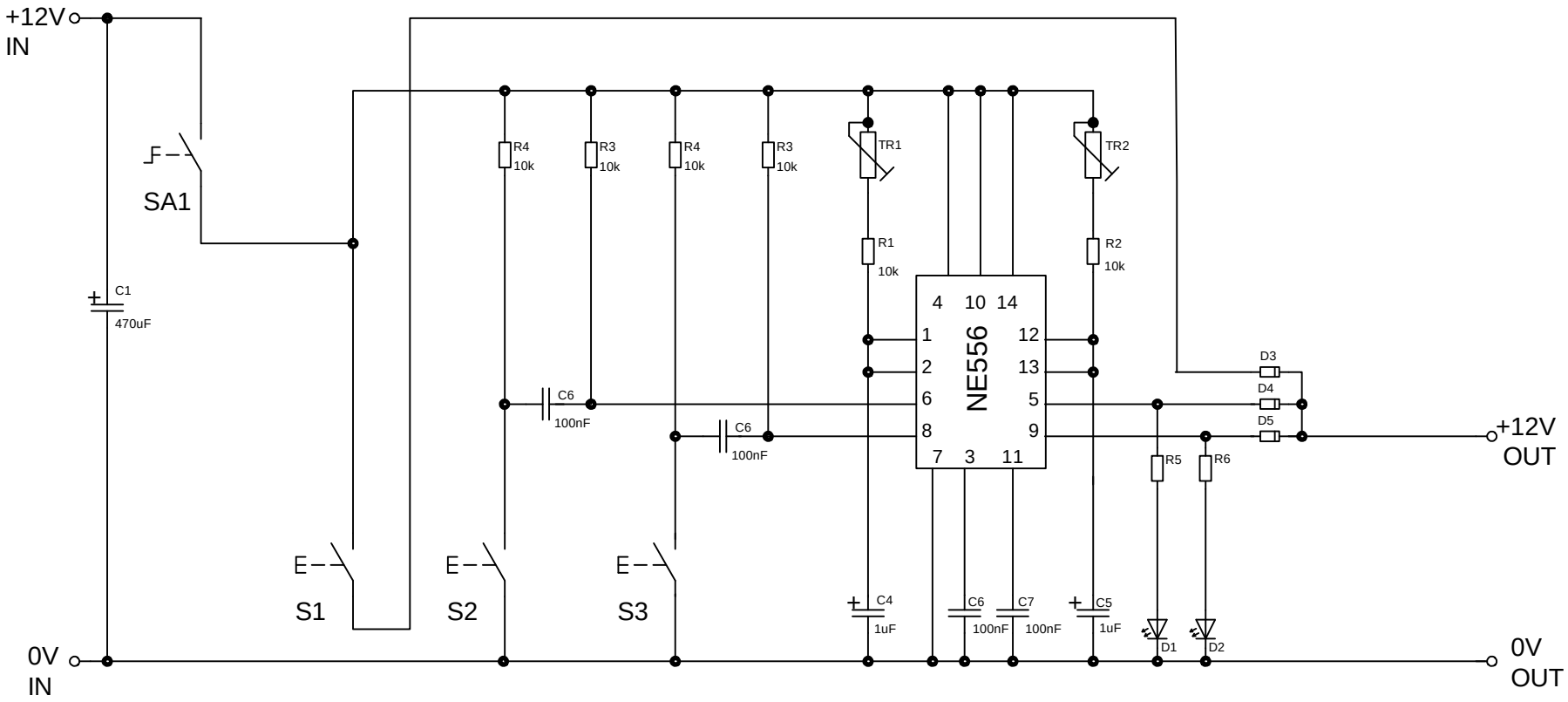

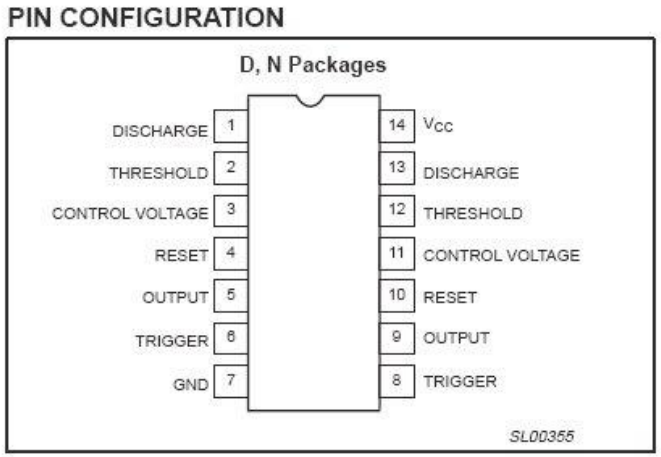

Figure 1. Pin Configuration