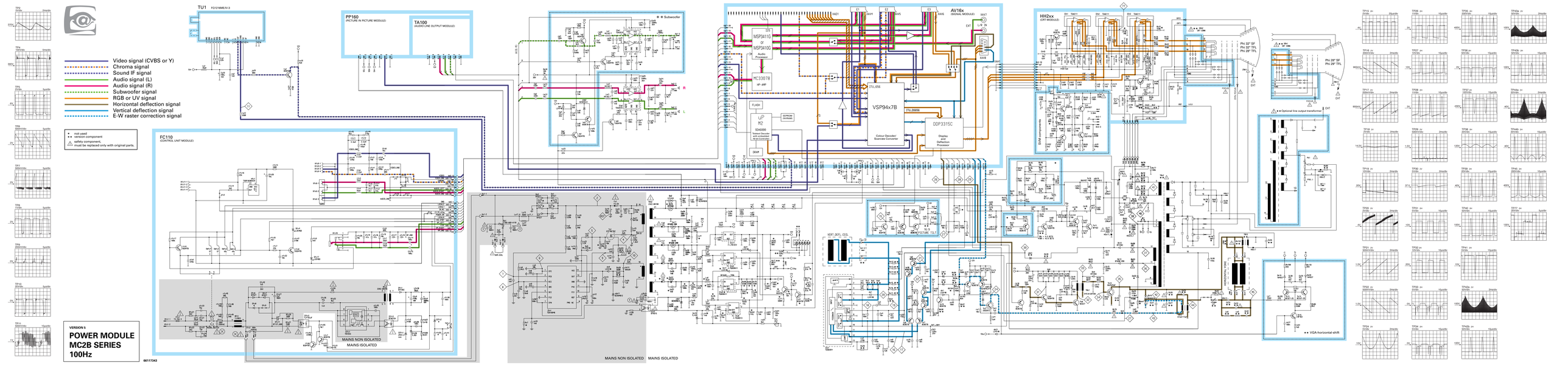
Video signal (CVBS or Y)
Chroma signal
Sound IF signal
Audio signal (L)
Audio signal (R)
Subwoofer signal
RGB or UV signal
Horizontal deflection signal
Vertical deflection signal
E-W raster correction signal
not used
version component
safety component, must be replaced only with original parts.
VERSION 5
POWER MODULE
MC2B SERIES
100Hz
66117343
TU1
PP160
(PICTURE IN PICTURE MODULE)
TA100
(AUDIO LINE OUTPUT MODULE)
FC110
(CONTROL UNIT MODULE)
MSP8410G
or
MSP8410C
Audio Processor
MC33078
AP-AMP
FLASH
µP
M2
SDA6666
Teletext Decoder
Text Processor
Video Controller
EEPROM
(Authoring)
DRAM
VSP94x7B
Colour Decoder/
Scavrate Converter
DDP3315C
Display
and
Deflection
Processor
AV16x
(SIGNAL MODULE)
HH2xx
(CRT MODULE)
Phi 32° SF
Phi 32° TFL
Phi 28° TFL
Phi 28° SF
Phi 29° TFL
Phi 29° SF
Optional line output transformer
VGA-horizontal-shift
MAINS NON ISOLATED
MAINS ISOLATED
MAINS NON ISOLATED
MAINS ISOLATED